Eindhoven University of Technology
Department of the Built Environment

Exam Dimensioning of Structures (7PPX0)
Friday, February 1, 2019

**Part Applied Mechanics**
Consists of these assignments and the AMMC answer sheet

**First read the information below**

- Use for your answers only the additionally given Applied Mechanics Multiple Choice (AMMC) answer sheet. First fill in your ID NUMBER on the sheet following the examples there, and completely fill the bubbles with the correct answers with a dark/black colour, e.g. light grey will not work. Note that the AMMC sheets will be processed automatically: A missing or incorrect ID NR., corrections, notes, and creased or folded paper will all result in 0 points. Only a single AMMC sheet per student is handed out. Hint: first give your answers on the assignment papers, and only at the end fill in the AMMC. As such, you also do not have to wait for the answer form to start. Another hint: use a soft lead pencil (Dutch: potlood), not a pen, so you can erase a possibly incorrect answer.

- Multiple Choice (MC) questions have only a single correct option, and scoring follows the usual practice: Marking only the correct option yields full points; not marking the correct option or marking several options, which may include the correct one, yields zero points. Differently, a Multiple Response (MR) question has a single or multiple correct options, and has at least 1 incorrect option (so in this exam 1, 2, 3, 4, or 5 options may be correct). Scoring for the MR questions follows the **Balanced Scoring Method** (*Tarasowa, D.; Auer S.: Balanced Scoring Method for Multiple-mark Questions. Proceedings CSEDU-2013, Science and Technology Publications*): First, each marked correct option yields $t/c$ points, with $t$ the total number of points for the question, and $c$ the number of correct options. Secondly, if you increase the guessing level artificially by marking a higher number of options than the number of correct options (i.e. #marked>c), the score is reduced by a penalty $(\#marked/6-c/6)*t/(1-c/6)$. This guarantees you the best results if you consider all options seriously, and **guessing will not bring you any benefits.** Also be assured that a negative score for the question is not possible (minimum = 0 points).

- "Complex" formulae are given to you on the last page before the included scrap paper.

- The course book, notes, laptop, mobile phone, and similar items are not permitted. Only a non-graphical pocket calculator is permitted.

- The last pages are scrap paper and marked as such. They will not be graded: as mentioned only the AMMC sheet will be used for the assessment.

- Assessment of this Part Applied Mechanics can yield up to 50 points. See the questions themselves for the maximum achievable points for each individual question.

- These assignments and the scrap paper should be taken home, only submit the AMMC answer sheet.

- To make for a complete question on a single page, white space may be present at the end of certain pages. This exam contains 2 assignments with 12 MC/MR questions. Make sure you have answered them all.

- Good luck!

**Assignment 1 (20 points)**

On the truss structure, as shown in the figure below, a horizontal force $F$ acts at point D. All trusses have the same Young's Modulus, equal to $E$. The cross-sectional area of the diagonal trusses equal $A\sqrt{2}$, and the horizontal and vertical trusses have a cross-sectional area equal to $A$. Normally, you should determine the truss forces by the method of sections, the method of joints, or a Cremona-Maxwell diagram. In this case, this has been carried out for you, and the truss forces equal:

$$F_1 = F_2 = -\frac{1}{2}F\sqrt{2}$$

$$F_3 = F_6 = +\frac{1}{2}F\sqrt{2}$$

$$F_4 = F_9 = +\frac{1}{2}F$$

$$F_5 = F_7 = -\frac{1}{2}F$$

$$F_8 = +F$$

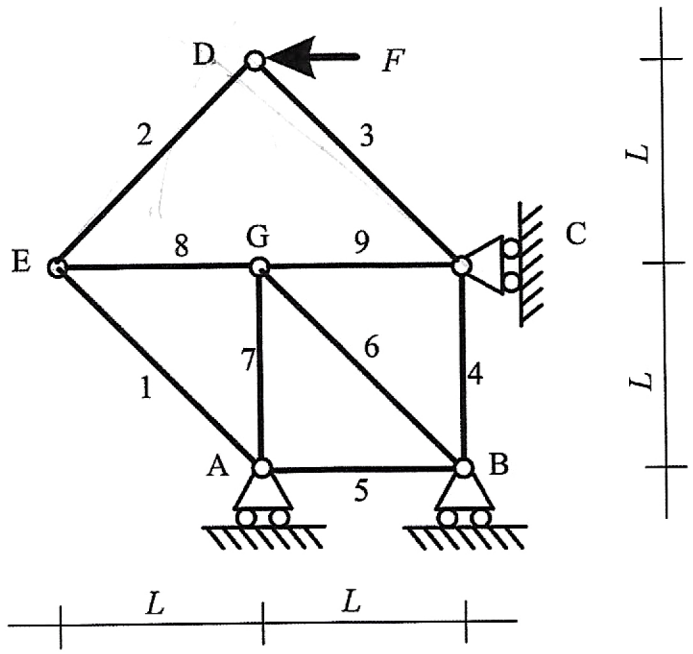


**Determine** the vertical and horizontal displacement of point D via a Williot diagram. For this you can use the first two pages of scrap paper. Start with point A as indicated on the paper.

**Use the following scale for the diagram:** $\frac{1}{2}\frac{FL}{EA} \equiv 10\,\text{mm} \equiv 2$ squares

**MC1 (3 points)**

Given the information above, what is the change of length of truss 3? This is a multiple choice question, which has a single correct answer.

A) $\Delta l_{DC} = +\frac{FL}{EA}$ B) $\Delta l_{DC} = +\frac{1}{2}\frac{FL}{EA}\sqrt{2}$ C) $\Delta l_{DC} = -\frac{FL}{EA}$

D) $\Delta l_{DC} = +\frac{1}{2}\frac{FL}{EA}$ E) $\Delta l_{DC} = -\frac{1}{2}\frac{FL}{EA}$ F) $\Delta l_{GC} = +\frac{1}{2}\frac{FL\sqrt{2}}{EA\sqrt{2}}$

**MC2 (3 points)**
Given the information above, what is the change of length of truss 5? This is a multiple choice question, which has a single correct answer.

A) $\Delta l_{AB} = -\frac{1}{2}\frac{FL}{EA}$ B) $\Delta l_{AB} = 0$ (zero stress bar due to 2 rollers) C) $\Delta l_{AB} = +\frac{1}{2}\frac{FL}{EA}$

D) Indeterminate (due to 2 rollers) E) $\Delta l_{AB} = \frac{FL}{EA}$ F) $\Delta l_{DC} = -\frac{1}{2}\frac{FL}{EA}\sqrt{2}$

**MR3 (10 points)**
Which of the parts below are part of the correct Willot diagram? For all parts below, dotted lines start in a point only in the direction in which they are needed, and of course it is arbitrarily whether a point is G' or G", taking G as an example. Note that this is a multiple response question, which has a single or multiple correct options, and has at least 1 incorrect option (so here 1, 2, 3, 4, or 5 options may be correct).

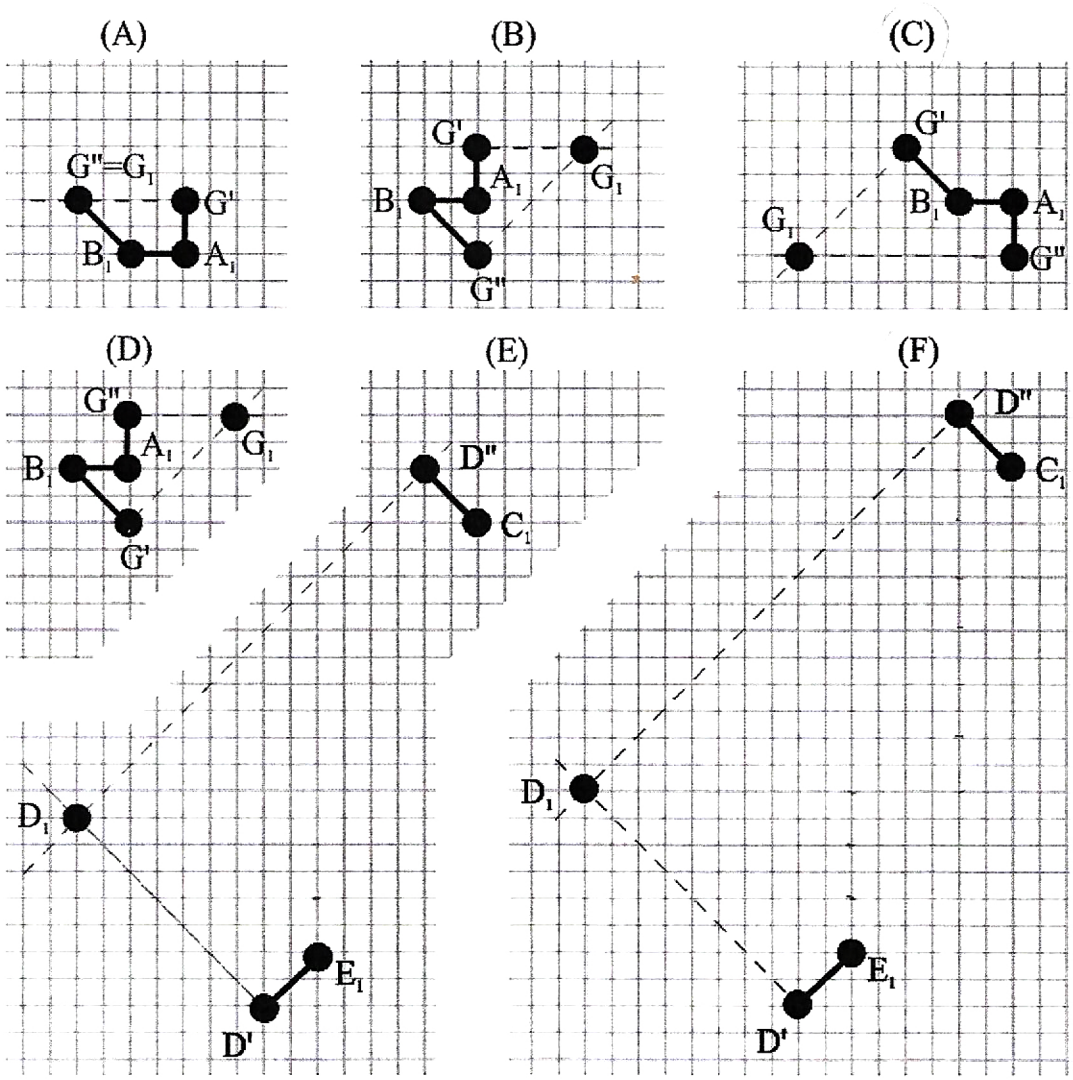

**MC4 (2 points)**
What is the horizontal displacement of point D? This is a multiple choice question, which has a single correct answer.

A) $w_{DH} \downarrow = 5\frac{FL}{EA}$ B) $\overset{\rightarrow}{w}_{DH} = 5\frac{1}{2}\frac{FL}{EA}$ C) $\overset{\leftarrow}{w}_{DH} = 5\frac{FL}{EA}$

D) $\overset{\leftarrow}{w}_{DH} = 3\frac{FL}{EA}$ E) $\overset{\leftarrow}{w}_{DH} = 4\frac{FL}{EA}$ F) $\overset{\leftarrow}{w}_{DH} = 5\frac{1}{2}\frac{FL}{EA}$

**MC5 (2 points)**
What is the vertical displacement of point D? This is a multiple choice question, which has a single correct answer.

A) $w_{DV} \downarrow = 2\sqrt{2}\frac{FL}{EA}$ B) $w_{DV} \downarrow = \sqrt{2}\frac{FL}{EA}$ C) $w_{DV} \uparrow = \frac{1}{2}\sqrt{2}\frac{\sigma L}{E}$

D) $w_{DV} \downarrow = 2\frac{1}{2}\frac{FL}{EA}$ E) $w_{DV} \downarrow = 3\frac{FL}{EA}$ F) $w_{DV} \downarrow = 1\frac{1}{2}\frac{FL}{EA}$

**<u>Assignment 2 (30 points)</u>**

The T-shaped structure in the figure below is positioned in the *y-z* plane. The coordinate system *x-y-z* is orthogonal. In point A the structure is completely clamped. In point C, a vertical force *F* acts in the positive *z*-direction, and in point D a force *F* works in negative *x*-direction. The bending stiffness about each axis of each part equals *EI*, and the torsional stiffness equals $GI_p$ (also for each part). **Normal and shear deformations can be neglected.** The final goal of this assignment is to determine the displacements of point C and D.

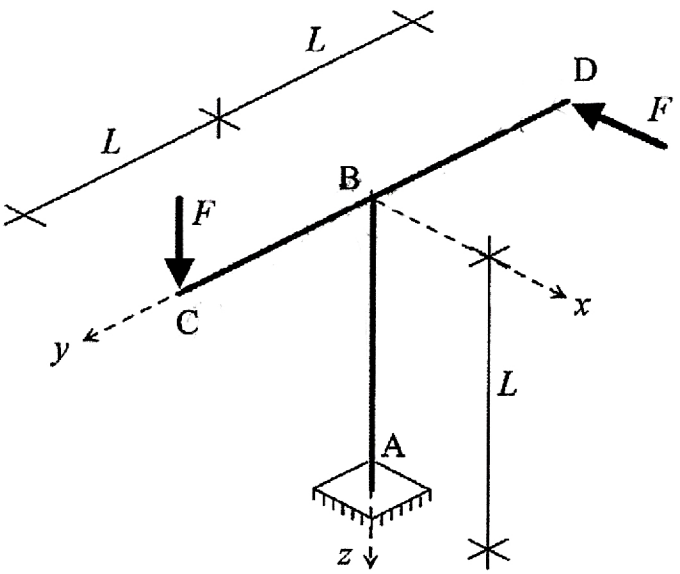

**MR6 (6 points)**
Which of the statements below are correct? Note that this is a multiple response question, which has a single or multiple correct options, and has at least 1 incorrect option (so here 1, 2, 3, 4, or 5 options may be correct).

A) As normal deformation can be neglected, the length of part AB does not change. Therefore, part AB can be replaced by a hinge at B, for calculating the displacements of C and D.

B) As only a horizontal force on D is acting, a roller can be assumed to be at D, which supports only in z-direction, for calculating the displacements of C and D.

C) If all reaction forces at A have been calculated, the structure can be clamped fictitiously at C, and using exclusion and further fictitious clamping, the displacements and rotations of B, A, and D can be calculated. Finally, knowing that the displacements of A are actually zero, the displacements of C and D can be calculated by taking the difference between their initially calculated values, and the initial values of A.

D) If normal and shear deformations would have been taken into account, the displacements could have been different significantly.

E) Shear stresses due to the force on C and due to the force on D have the same orientation and thus their effects should be taken into account together.

F) Part CBD is not loaded by a normal force.

**MR7 (5 points)**

Exclude part CBD and calculate the rotations and displacements of B. Indicate the correct answers below. Note that this is a multiple response question, which has a single or multiple correct options, and has at least 1 incorrect option (so here 1, 2, 3, 4, or 5 options may be correct).

A) $\varphi_{Bx}\,{}^{y}_{z}\circlearrowleft = \dfrac{FLL}{EI}$ B) $\varphi_{By}\circlearrowleft^{z}_{x} = \dfrac{FLL^2}{2EI}$ C) $\varphi_{By}\circlearrowleft^{x}_{z} = \dfrac{FL^2}{2EI}$

D) $w_{Bx} = \dfrac{FL^3}{3EI}$ E) $w_{Bx} = -\dfrac{FL^3}{3EI}$ F) $w_{By} = \dfrac{FLL}{2EA}$

**MR8 (5 points)**

Now fictitiously and completely clamp the structure at B, and find the displacements at C. Indicate the correct answers below. Note that this is a multiple response question, which has a single or multiple correct options, and has at least 1 incorrect option (so here 1, 2, 3, 4, or 5 options may be correct).

A) $w_{Cx} = w_{Bx} + \varphi_{Bz}\,{}^{x}_{y}\circlearrowleft L$ B) $w_{Cy} = w_{By} + 0$ C) $w_{Cz} = w_{Bz} + \varphi_{Bx}\,{}^{y}_{z}\circlearrowleft L + \dfrac{FL^3}{3EI}$

D) $w_{Cx} = w_{Bx} + \varphi_{Bz}\,{}^{x}_{y}\circlearrowleft L + \dfrac{F(2L)^3}{EI}$ E) $w_{Cy} = w_{By} + \varphi_{By}\,{}^{x}_{z}\circlearrowleft L + 0$ F) $w_{Cz} = \varphi_{Bx}\,{}^{y}_{z}\circlearrowleft L + \dfrac{FL^3}{3EI}$

**MR9 (5 points)**

Now fictitiously and completely clamp the structure at B, and find the displacements at D. Indicate the correct answers below. Note that this is a multiple response question, which has a single or multiple correct options, and has at least 1 incorrect option (so here 1, 2, 3, 4, or 5 options may be correct).

A) $w_{Dx} = w_{Bx} - \varphi_{Bz} \circlearrowleft_{x}^{y} L - \frac{FL^3}{3EI}$ B) $w_{Dy} = w_{By} + 0$ C) $w_{Dz} = w_{Bz} - \varphi_{Bx} \circlearrowright_{z}^{y} L$

D) $w_{Dx} = w_{Bx} - \varphi_{Bz} \circlearrowleft_{y}^{x} L + \frac{FL^3}{3EI}$ E) $w_{Dx} = w_{Bx} - \varphi_{Bz} \circlearrowleft_{y}^{x} L - \frac{F(2L)^3}{3EI}$ F) $w_{Cy} = w_{By} + \varphi_{By} \circlearrowright_{z}^{x} L + 0$

**MC10 (2 points)**

What are the final solutions for the displacement of point C in *x,y,* and *z*-direction respectively? This is a multiple choice question, which has a single correct answer.

A) $\frac{1}{3}\frac{FL^3}{EI} - \frac{FL^3}{GI_p}, \frac{1}{2}\frac{FL^3}{EI}, -\frac{4}{3}\frac{FL^3}{EI}$

B) $\frac{1}{2}\frac{FL^3}{EI} - \frac{FL^3}{GI_p}, \frac{1}{2}\frac{FL^3}{EI}, -\frac{4}{3}\frac{FL^3}{EI}$

C) $\frac{1}{2}\frac{FL^3}{EI} - \frac{FL^3}{GI_p}, \frac{1}{2}\frac{FL^3}{EI}, -\frac{5}{2}\frac{FL^3}{EI}$

D) $-\frac{2}{3}\frac{FL^3}{EI} - \frac{FL^3}{GI_p}, \frac{1}{2}\frac{FL^3}{EI}, -\frac{FL^3}{EI}$

E) $-\frac{1}{3}\frac{FL^3}{EI}, \frac{1}{2}\frac{FL^3}{EI}, \frac{4}{3}\frac{FL^3}{EI} + \frac{FL^3}{GI_p}$

F) $-\frac{1}{3}\frac{FL^3}{EI} + \frac{FL^3}{GI_p}, \frac{1}{2}\frac{FL^3}{EI}, \frac{4}{3}\frac{FL^3}{EI}$

**MC11 (2 points)**

What are the final solutions for the displacement of point D in *x,y,* and *z*-direction respectively? This is a multiple choice question, which has a single correct answer.

A) $-\frac{2}{3}\frac{FL^3}{EI} - \frac{FL^3}{GI_p}, \frac{1}{2}\frac{FL^3}{EI}, -\frac{1}{2}\frac{FL^3}{EI}$

B) $\frac{2}{3}\frac{FL^3}{EI} - \frac{FL^3}{GI_p}, \frac{1}{2}\frac{FL^3}{EI}, -\frac{FL^3}{EI}$

C) $-\frac{1}{6}\frac{FL^3}{EI} + \frac{FL^3}{GI_p}, -\frac{1}{6}\frac{FL^3}{EI}, \frac{4}{3}\frac{FL^3}{EI}$

D) $-\frac{2}{3}\frac{FL^3}{EI} - \frac{FL^3}{GI_p}, \frac{1}{2}\frac{FL^3}{EI}, -\frac{FL^3}{EI}$

E) $-\frac{1}{3}\frac{FL^3}{EI} + \frac{FL^3}{GI_p}, -\frac{1}{2}\frac{FL^3}{EI}, \frac{4}{3}\frac{FL^3}{EI}$

F) $-\frac{1}{3}\frac{FL^3}{EI} + \frac{FL^3}{GI_p}, \frac{1}{2}\frac{FL^3}{EI}, \frac{4}{3}\frac{FL^3}{EI}$

**MR12 (5 points)**

Assume part AB is a hollow circular steel tube, with an interior radius equal to 80 mm and an outer radius equal to 90 mm. Furthermore, each force *F* equals 100 kN. Which of the statements below are correct? Note that this is a multiple response question, which has a single or multiple correct options, and has at least 1 incorrect option (so here 1, 2, 3, 4, or 5 options may be correct).

A) The maximal normal stress that can be found in the cross-section equals once the maximum normal stress due to bending plus the normal stress equal to the force F divided by the cross-sectional area.

B) Part AB is subject to bending about the x-axis, bending about the y-axis, torsion about the z-axis, and a normal force.

C) Assuming a single bending moment of 100 kN * 2 meter is working on the cross-section, the maximum bending stress (compression and tension) equals 400 $N/mm^2$

D) Not taking shear stresses into account, part AB is not safe to use if the material can withstand compression and tension stresses equal to only 900 $N/mm^2$.

E) The bending moment about the x-axis in part AB in constant over the height, whereas the torsional moment about the z-axis is variable over the height.

F) The torsional bending moment will reduce the bending moments that part AB can withstand without torsion.

Formulae

**Second moments of area**

Rectangular cross-section

$$I = \frac{1}{12} bh^3$$

Triangular cross-section

$$I = \frac{1}{36} bh^3$$

Hollow circular cross-section

$$I = \frac{1}{4} \pi (R_u^4 - R_i^4)$$

Polar moment of area

$$I_p = \frac{1}{2} \pi (R_u^4 - R_i^4)$$

**Stress**

$$\sigma = \frac{N}{A}$$

$$\sigma = \frac{M z}{I}$$

$$\tau = \frac{V S}{b I}$$

$$\tau = \frac{M r}{I_p}$$

**Elongation**

$$\Delta l = \frac{Nl}{EA}$$

| **Standard beam equations** | |
|---|---|
| 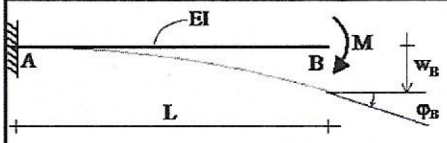 | $\varphi_B \circlearrowright = \frac{ML}{EI}$ $\quad w_B \downarrow = \frac{ML^2}{2EI}$ |
| 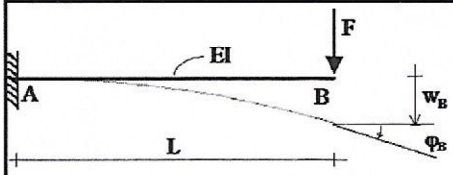 | $\varphi_B \circlearrowright = \frac{FL^2}{2EI}$ $\quad w_B \downarrow = \frac{FL^3}{3EI}$ |
| 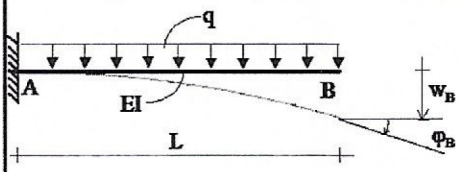 | $\varphi_B \circlearrowright = \frac{qL^3}{6EI}$ $\quad w_B \downarrow = \frac{qL^4}{8EI}$ |
| 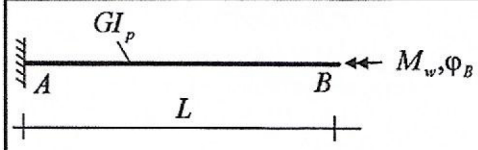 | $\varphi_B = \frac{M_w L}{GI_p}$ |
| **Additional standard beam equations** | |
| 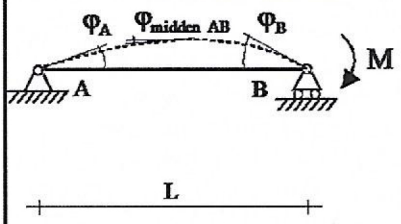 | $\circlearrowleft \varphi_A = \frac{ML}{6EI}$ $\quad \circlearrowleft \varphi_{middle\_AB} = \frac{ML}{24EI}$<br>$\varphi_B \circlearrowright = \frac{ML}{3EI}$ $\quad \uparrow w_{middle\_AB} = \frac{ML^2}{16EI}$ |
| 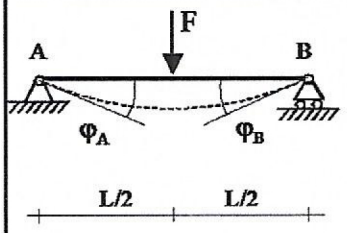 | $\varphi_A \circlearrowright = \frac{FL^2}{16EI}$ $\quad \circlearrowleft \varphi_B = \frac{FL^2}{16EI}$<br>$\downarrow w_{middle\_AB} = \frac{FL^3}{48EI}$ |
| 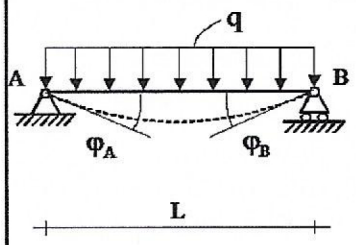 | $\varphi_A \circlearrowright = \frac{qL^3}{24EI}$ $\quad \circlearrowleft \varphi_B = \frac{qL^3}{24EI}$<br>$\downarrow w_{middle\_AB} = \frac{5}{384}\frac{qL^4}{EI}$ |

EINDHOVEN UNIVERSITY OF TECHNOLOGY

DEPARTMENT: BUILT ENVIRONMENT
UNIT: STRUCTURAL DESIGN

Final test: Dimensioning of Structures (7PPX1) **MATERIALS PART**

Date: February 1st, 2019
Time: 13.30 - 16.30 h

---

# Dimensioning of Structures – Final test - MATERIALS

# Assignments and answer sheet

**First read the following terms and conditions regarding writing and submitting the replies of the test!**

- write your surname including initials and identity number of your study card clearly on the top of the answer sheet (page 19)
- page 21 and 22 are scratch paper, this will not be graded by the lecturer
- for the multiple-choice questions, clearly check the box on the answer sheet; other comments will not be taken into account
- only a single set of assignments and answer sheet per student is handed out, so think carefully first before writing down the answers
- masonry formulas see page 13
- timber tables see page 14-17
- course book, notes, laptop, mobile phone, and similar are not permitted
- a non-graphical pocket calculator is permitted
- it is permitted to separate the scratch paper (page 21 and 22) and answer sheet (page 19)

# <u>only return the answer sheet</u>

**Assessment of the assignments of this materials part of the final test**:
All multiple choice questions two points, except question 4, 10, 14 and 22 three points.
(Maximum total of 50 points)

**Assessment of the total final test (incl. mechanics):** total number of points divided by 10.
This final test contributes for 80 % to the final grade.

# Final test 7PPX1 Dimensioning of structures, MATERIALS

## Concrete

1) Which statement is correct? In a typical structural concrete high-rise building, stability is provided by...

   A) ...a framework of shear walls in one direction and rigid moment connections between the walls and floors in the perpendicular direction.
   B) ...columns with rigid moment connections to the floors in 2 perpendicular directions.
   C) ...columns with rigid moment connections to beams in 1 direction and rigid moment connections between beams and floors in the perpendicular direction.
   D) ...a structural core with rigidly connected walls in perpendicular directions, to which a framework of floors and columns is connected.

2) The figure below gives a stress-strain relation of concrete class C40/50, as it is often used in structural calculations. Which statement about this figure is correct?

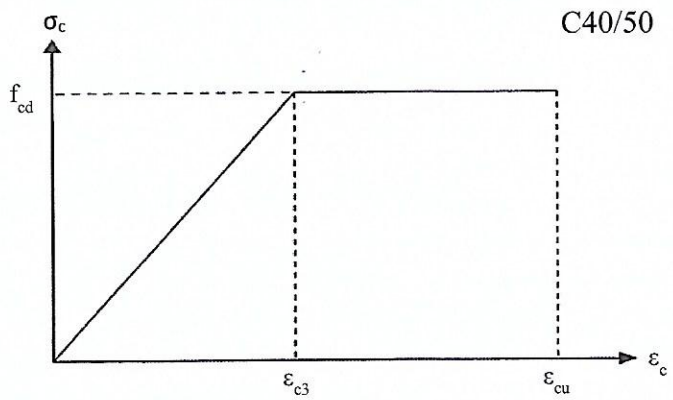


   A) The figure presents a stress-strain relation of concrete <u>in tension</u>.
   It holds that $f_{cd}$ = 40.0 N/mm$^2$, $\varepsilon_{c3}$ = 2.0 ‰, $\varepsilon_{cu}$ = 4.0 ‰.
   B) The figure presents a stress-strain relation of concrete <u>in tension</u>.
   It holds that $f_{cd}$ = 26.6 N/mm$^2$, $\varepsilon_{c3}$ = 1.75 ‰, $\varepsilon_{cu}$ = 3.5 ‰.
   C) The figure presents a stress-strain relation of concrete <u>in compression</u>.
   It holds that $f_{cd}$ = 40.0 N/mm$^2$, $\varepsilon_{c3}$ = 2.0 ‰, $\varepsilon_{cu}$ = 4.0 ‰.
   D) The figure presents a stress-strain relation of concrete <u>in compression</u>.
   It holds that $f_{cd}$ = 26.6 N/mm$^2$, $\varepsilon_{c3}$ = 1.75 ‰, $\varepsilon_{cu}$ = 3.5 ‰.

3) The slenderness $l_{eff}/d$ is important in the structural design of reinforced concrete floors. For two different support conditions given in the figure below, what should the slenderness be?

Support condition I

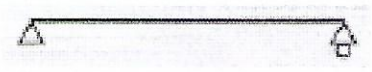

Support condition II

A) $l_{eff}/d$ = 1/25 for support conditions I, $l_{eff}/d$ = 1/35 for support conditions II.
B) $l_{eff}/d$ = 1/35 for support conditions I, $l_{eff}/d$ = 1/25 for support conditions II.
C) $l_{eff}/d$ = 1/25 for both support conditions.
D) $l_{eff}/d$ = 1/35 for both support conditions.

Take 8 m

4) Consider the reinforced concrete beam loaded and supported according to the scheme below. With regard to this structure, the following is given: **(3 points)**

Concrete class C30/37
Section dimensions: width x heigth = 300 x 600 mm$^2$
Reinforcement steel quality B500 ($f_{yd}$ = 435 N/mm$^2$)
Centre span $l$ = 8000 mm, cantilever = 1000 mm.
Two point loads acting downwards
at the centre span and at the cantilever,
design value $F_d$ = 40 kN and $F_d$ = 20 kN respectively,
Effective internal height d = 550 mm.

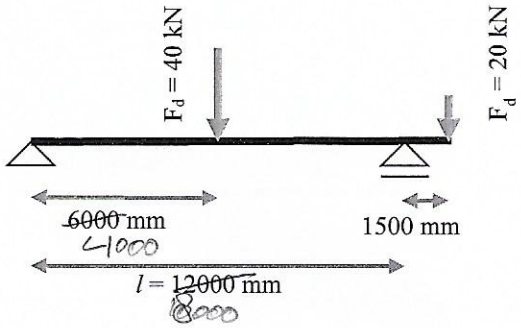


What is the minimally required section area $A_s$ of the bending reinforcement in the section with the biggest bending moment, if the internal lever arm z is calculated with the approximate method?

A) 439 mm$^2$
B) 488 mm$^2$
C) 502 mm$^2$
D) 557 mm$^2$

5) Consider the beam of the previous question. With regard to shear, the following equations are given:

$$v_{min} = 0,035\, k^{\frac{3}{2}} \sqrt{f_{ck}} \qquad k = 1 + \sqrt{\frac{200}{d}} \leq 2,0 \; (d \; in \; mm)$$

What is correct?

A) $V_{Ed}$ = 22.5 kN en $V_{Rd,c}$ = 64 kN
B) $V_{Ed}$ = 22.5 kN en $V_{Rd,c}$ = 52 kN
C) $V_{Ed}$ = 17.5 kN en $V_{Rd,c}$ = 52 kN
D) $V_{Ed}$ = 17.5 kN en $V_{Rd,c}$ = 64 kN

## Steel

6) Which of the following statements is true:

A) Steel grade S235 has a larger tensile strength than steel grade S355
B) Steel grade S355 has a smaller yield stress than steel grade S235
C) Steel grade S355 has a larger Young's modulus than steel grade S235
D) Steel grade S355 has a larger yield stress and tensile strength than steel grade S235

---

Consider the data below for the next two Steel questions (question 7 and 8).

A simply supported beam HE300A in S235 is loaded in bending about its strong axis. The beam is loaded by a uniformly distributed self-weight action $q_{sw}$ = 10 kN/m and a uniformly distributed variable action $q_v$ = 25 kN/m. The span of the beam is L = 7.2 m.

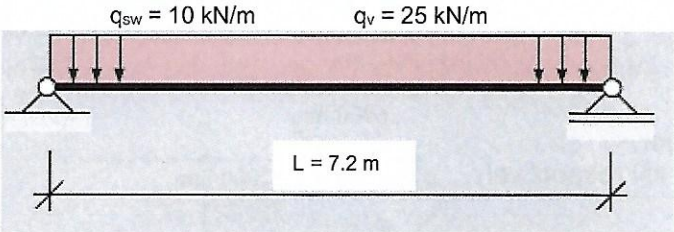


Other data:
Partial factors for the ultimate limit state: $\gamma_{sw}$ = 1.2 and $\gamma_v$ = 1.5
Partial factors for the serviceability limit state: $\gamma_{sw} = \gamma_v$ = 1.0

Classification table:

| type of plate part | type of loading | class 1 (plastic) | class 2 (compact) | class 3 (semi-compact) |
|---|---|---|---|---|
| flange 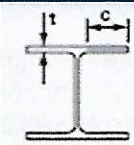 | compression | $\frac{c}{t} \leq 9$ | $\frac{c}{t} \leq 10$ | $\frac{c}{t} \leq 14$ |
| web 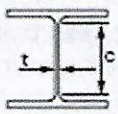 | bending | $\frac{c}{t} \leq 72$ | $\frac{c}{t} \leq 83$ | $\frac{c}{t} \leq 124$ |
| | compression | $\frac{c}{t} \leq 33$ | $\frac{c}{t} \leq 38$ | $\frac{c}{t} \leq 42$ |

Applied mechanics:
$M = qL^2/8$

Formulas for moment resistance ($\gamma_{M0}$ = 1.0):

Check: $\frac{M_{Ed}}{M_{c,Rd}} \leq 1,0$

Class 1 and 2: $M_{c,Rd} = M_{pl,Rd} = \frac{W_{pl} f_y}{\gamma_{M0}}$

Class 3: $M_{c,Rd} = M_{el,Rd} = \frac{W_{el,min} f_y}{\gamma_{M0}}$

Material and cross-section properties:

S235 $f_y = 235$ N/mm$^2$ $E = 2.1 \cdot 10^5$ N/mm$^2$

HE300A

| | | | |
|---|---|---|---|
| A | = 11250 mm$^2$ | $I_y$ | = $18263 \cdot 10^4$ mm$^4$ |
| h | = 290 mm | $W_{y,el}$ | = $1260 \cdot 10^3$ mm$^3$ |
| b | = 300 mm | $W_{y,pl}$ | = $1383 \cdot 10^3$ mm$^3$ |
| $t_w$ | = 8,5 mm | $I_z$ | = $6310 \cdot 10^4$ mm$^4$ |
| $t_f$ | = 14 mm | $W_{z,el}$ | = $420.6 \cdot 10^3$ mm$^3$ |
| r | = 27 mm | $W_{z,pl}$ | = $641.2 \cdot 10^3$ mm$^3$ |

---

7) Which of the following statements is true:

A) The cross-section belongs to class 1
B) The cross-section belongs to class 2
C) The cross-section belongs to class 3
D) The cross-section belongs to class 4

8) Which of the next statements is true, assuming the cross-section belongs to class 3:

A) The moment resistance is sufficient since the unity check is 0.92
~~B)~~ The moment resistance is not sufficient since the unity check is 1.08
C) The moment resistance is sufficient since the unity check is 1.08
~~D)~~ The moment resistance is not sufficient since the unity check is 0.92

---

Consider the data below for the next two Steel questions (question 9 and 10).

A 5 m long façade column IPE200 in S235 (see figure next page) is loaded by a concentrated load. Assume the cross-section to be of class 1 (plastic). The column is fully supported against flexural buckling out-of-plane of the facade. However, in-plane of the façade the column is only supported at the top (roof), at the bottom (foundation) and in the middle as indicated by 'x' in the figure below.

Data:

| | | | |
|---|---|---|---|
| IPE200 | $W_{y;el} = 194.3 \cdot 10^3$ mm$^3$ | h = 200 mm | r = 12 mm |
| | $W_{y;pl} = 220.6 \cdot 10^3$ mm$^3$ | $t_f$ = 8.5 mm | $t_w$ = 5.6 mm |
| S235 | $f_y$ = 235 N/mm$^2$ | $I_y = 1943 \cdot 10^4$ mm$^4$ | b = 100 mm |
| | E = 210000 N/mm$^2$ | $I_z = 142.4 \cdot 10^4$ mm$^4$ | A = 2848 mm$^2$ |

| Buckling curve | $a_0$ | a | b | c | d |
|---|---|---|---|---|---|
| Imperfection factor $\alpha$ | 0.13 | 0.21 | 0.34 | 0.49 | 0.76 |

Column formulas and associated tables:

$$N_{cr} = \frac{\pi^2 EI}{L_{cr}^2} \qquad \bar{\lambda} = \sqrt{\frac{Af_y}{N_{cr}}}$$

$$\chi = \frac{1}{\Phi + \sqrt{\Phi^2 - \bar{\lambda}^2}} \leq 1.0$$

with $\Phi = 0.5\left[1 + \alpha\left(\bar{\lambda} - 0.2\right) + \bar{\lambda}^2\right]$

$$\frac{N_{Ed}}{N_{b,Rd}} \leq 1{,}0 \qquad N_{b,Rd} = \frac{\chi A f_y}{\gamma_{M1}}$$

$$\gamma_{M1} = 1{,}0$$

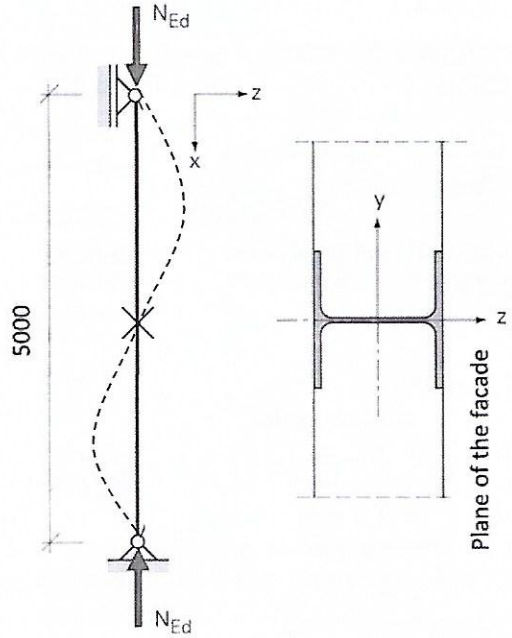


Buckling curve selection table:

| cross section | | limitation | | buckles around axis | buckling curve S235 S275 S355 S420 | S460 |
|---|---|---|---|---|---|---|
| Rolled sections | 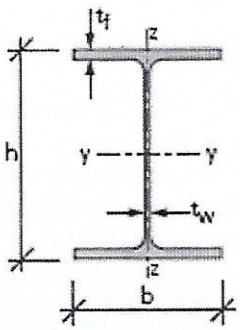 | $\frac{h}{b} > 1{,}2$ | $t_f \leq 40$ mm | y–y | a | $a_0$ |
| | | | | z–z | b | $a_0$ |
| | | | 40 mm < $t_f \leq 100$ mm | y–y | b | a |
| | | | | z–z | c | a |
| | | $\frac{h}{b} \leq 1{,}2$ | $t_f \leq 100$ mm | y–y | b | a |
| | | | | z–z | c | a |
| | | | $t_f > 100$ mm | y–y | d | c |
| | | | | z–z | d | c |
| Hollow sections | 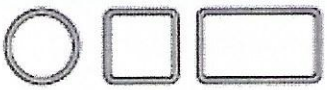 | hotformed | | every axis | a | $a_0$ |
| | | cold formed and welded | | every axis | c | c |

---

9) Which buckling curve applies for flexural buckling in-plane of the facade?
   A) Buckling curve a
   B) Buckling curve b
   C) Buckling curve c
   D) Buckling curve d

10) Assume buckling curve b as the correct one. Then the buckling resistance is: **(3 points)**
   A) 231 kN
   B) 282 kN
   C) 321 kN
   D) 435 kN

## Aluminium

11) Which of next strength properties is generally used for the check of an aluminium structure in the ultimate limit state?

A) The proportionality limit $f_p$ (the stress that indicates the maximum value for linear elastic material behaviour)
B) The 0.2% strain limit $f_{0.2}$ (the stress that delivers a permanent strain of 0.2% after unloading)
C) The yield strength $f_y$ (the stress that characterizes the start of material yielding as for steel)
D) The tensile strength $f_t$ (the stress that characterizes the ultimate tensile stress)

12) In comparison with steel, aluminium alloyed for structural applications is:

A) Less strong
B) Less stable
C) Less corrosion resistant
D) Less fire resistant

Next aluminium cross-section is composed out of three welded parts. The four arrows indicate the locations of the welds.

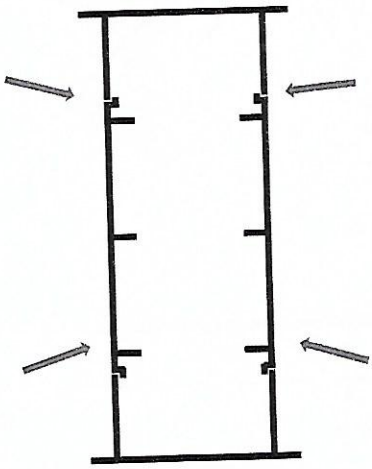

13) What is the most logical reason for the section to be composed out of three parts?

A) The dimensions of the cross-section are too large to be extruded by one die
B) The three parts are smaller and therefore more easy to transport
C) The three parts are lighter and therefore more easy to construct
D) The strength of the cross-section will improve a lot

**Timber** (Timber tables on page 14 to 17)

14) Joost is designing his new garage. In his garage he wants a structure to lift his Land Rover Defender for maintenance. Therefore he designed the truss structure given in the picture below.
The maximum variable load he wants to lift is: $F_{variabel\ load} = 11.8\,kN$ which is equal to 2/3 of the weight of the car. The safety factor for Consequence Class 1 is: $\gamma_q = 1.35$. The maximum moment in the middle can be calculated as the reaction at one of the supports times half of the length of the span ($M = \frac{1}{4} \cdot F \cdot L$). The moment of resistance of a rectangular section is: $W = \frac{1}{6} \cdot w \cdot h^2$.
The size of the sawn timber is 59x171 mm, strength class C24 and the specie is spruce. The load duration class for lifting can be denoted as 'short'. The garage is connected to the central heating system. Calculate the design bending stress in the horizontal beams at mid span. And judge the construction with a Unity Check.

$$\sigma_{m,d} = \frac{M_d}{W} \qquad f_{m,d} = \frac{f_{m,k}}{\gamma_M} \cdot k_{mod} \qquad UC = \frac{\sigma_{m,d}}{f_{m,d}} \qquad F_d = F_{variabel\ load} \cdot \gamma_q$$

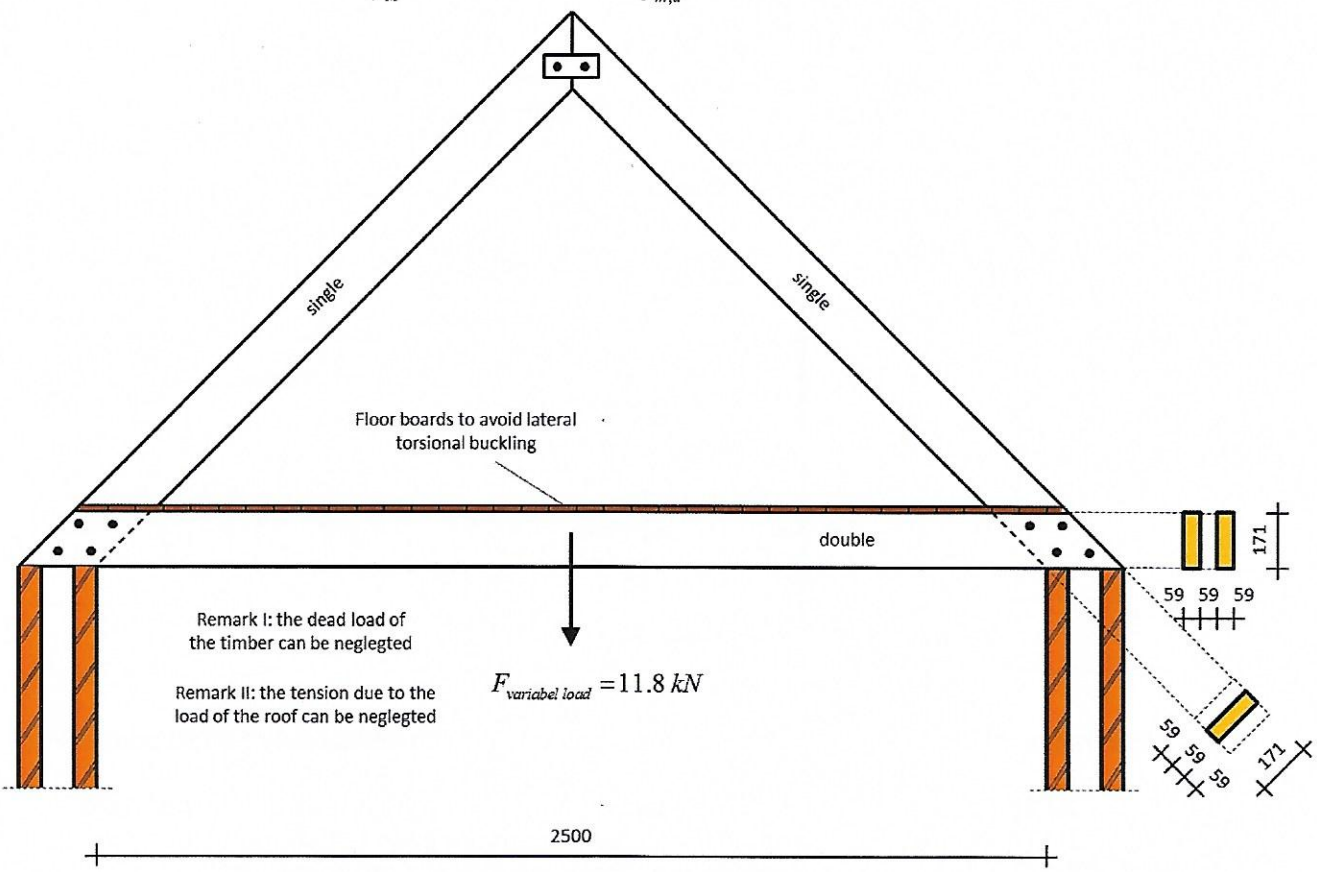


A) $\sigma_{m,d} = 34.6$ N/mm², UC = 2.08 ≥ 1.00, construction design is not OK
B) $\sigma_{m,d} = 17.3$ N/mm², UC = 0.96 ≤ 1.00, construction design is OK!
C) $\sigma_{m,d} = 17.3$ N/mm², UC = 1.04 ≥ 1.00, construction design is not OK
D) $\sigma_{m,d} = 16.6$ N/mm², UC = 1.04 ≥ 1.00, construction design is not OK

15) Joost has made a timber-timber-timber and a steel-timber connection to fasten his lifting equipment. The connection is given in the figure below.
The safety factor for Consequence Class 1 is: $\gamma_q = 1.35$. The variable load is:
$F_{variabel\ load} = 11.8\ kN$ which is equal to 2/3 of the weight of the car.
Bolts M12-4.6 are used. All prescribed edge distances by Eurocode 5 are used.
The design load for a steel-timber connection per shear plane for bolts M12 is:
$F_{v,u,d} = 6.6\ kN$
The design load for a timber-timber connection per shear plane for bolts M12 is:
$F_{v,u,d} = 4.9\ kN$
Calculate the Unity Check of the given connection.

$$F_d = F_{variabel\ load} \cdot \gamma_q \qquad UC = \frac{F_d}{n_{shear\ planes} \cdot F_{v,u,d}}$$

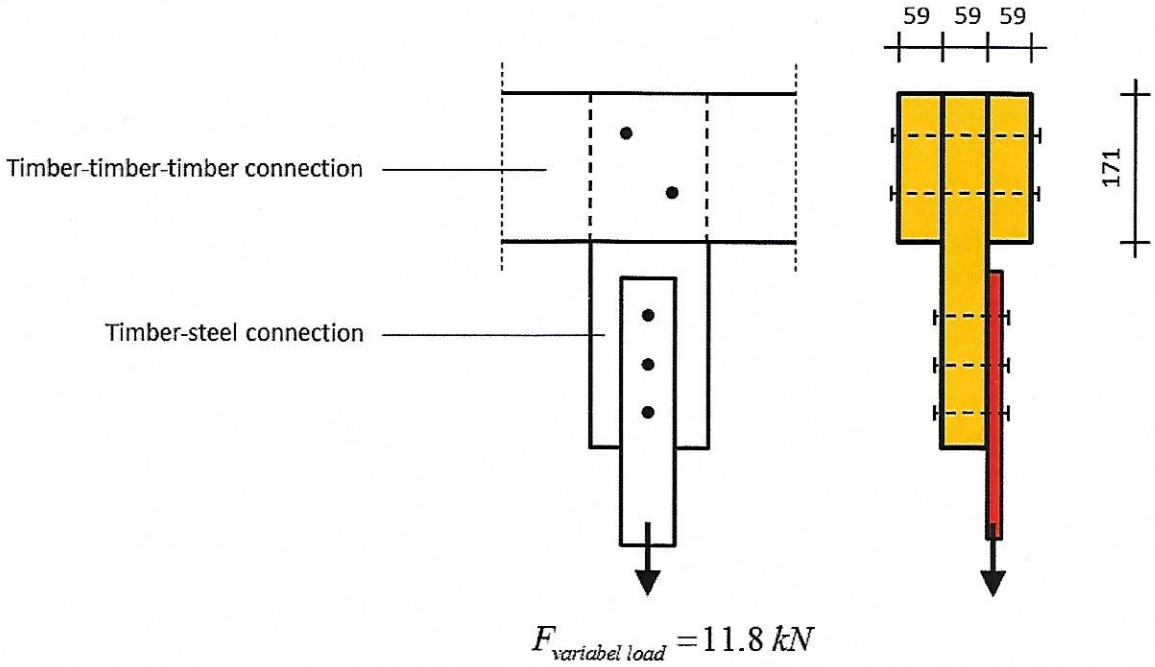


A) UC = 1.63
B) UC = 0.99
C) UC = 0.80
D) UC = 1.05

16) Which objective do the two timber certification institutions FSC and PEFC have in common:

A) ensuring the durability of the wood.
B) maintaining the integrity and diversity of forests.
C) ensuring sustainable forest management.
D) combating clear-cut and stimulating natural growth.

17) A student is in his spare time assistant of a carpenter and helps with designing and hanging a double wooden garage door. He has four variants to choose from, given below. Which variant gives the slightest reason for later complaints from the client.

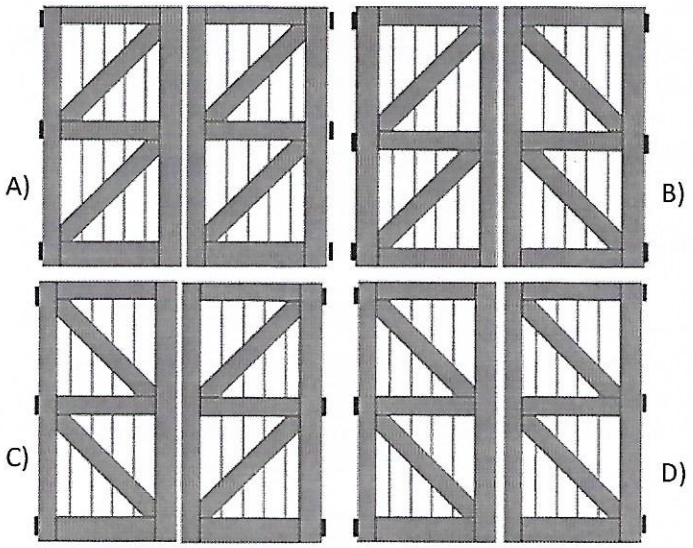


A) Top left
B) Top right
C) Bottom left
D) Bottom right

18) Wood is orthotropic, the properties in the different directions are uneven. The following possibilities are given in increasing strength. Which is correct?

A) Compression parallel, tension parallel, tension perpendicular, compression perpendicular
B) Compression perpendicular, tension parallel, tension perpendicular, compression parallel
C) Tension perpendicular, compression perpendicular, tension parallel, compression parallel
D) Compression parallel, tension perpendicular, compression perpendicular, tension parallel

**Masonry** (Formula sheet on page 13)

19) Statement I: Pointing mortar improves the quality of the masonry joints.
Statement II: In gothic churches pinnacles are used to drain the water from the façade.

A) both statements are correct
B) statement I is correct and statement II is incorrect
C) statement I is incorrect and statement II is correct
D) both statements are false

20) A masonry wall (left), 200 mm thick and 2 m high, is loaded by wind, with the design value $w_d$. One may assume that the wall is built between two rigid reinforced concrete floor slabs, as shown in the figure below. The floors are supported in the horizontal direction by an infinitely strong and stiff core (translated to a roller).
It can be assumed, that the wall is made of loose stacked, rigid blocks and that the coefficient of friction between the building blocks and between the building blocks and the support is equal to 0.333.
The own weight of the wall and the reinforced concrete floor slab on top may be neglected. There is no need to take into account the load factors. The equally distributed load on the floor slab equals $q_d$ = 5 kN/m.

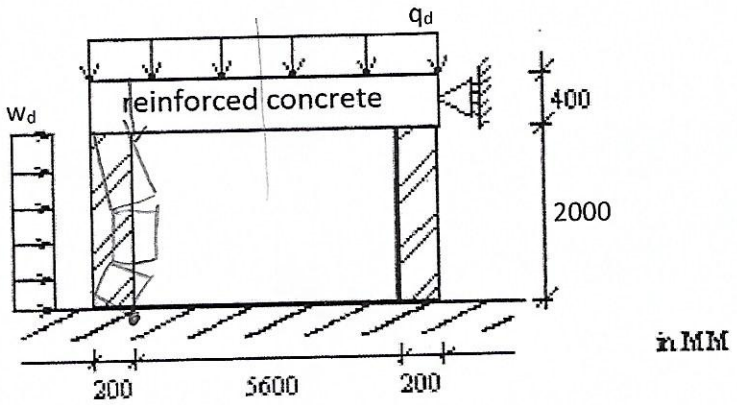


What is the value of the wind load ($w_d$), when the wall is just in equilibrium?

A) 1,5 kN/m
B) 2,5 kN/m
C) 5,0 kN/m
D) 6,0 kN/m

21) A semi-circular arch, composed of loose stacked, rigid blocks, is loaded by two 200 kN forces ( see figure on right). The self-weight may be neglected. Calculate the range of the thrust force at one of the supports (in kN), for which the arch can carry the load.

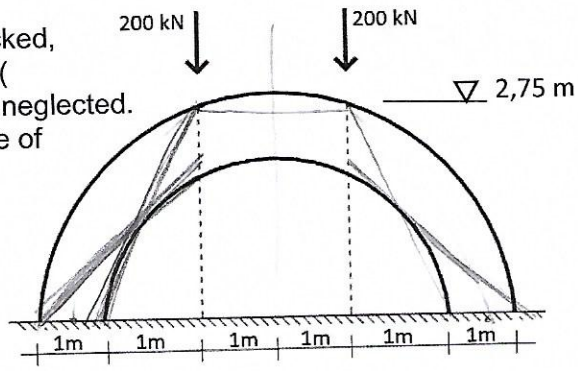


A) 73 - 145 kN
B) 91 - 145 kN
C) 73 - 200 kN
D) 91 - 200 kN

22) A structural engineer needs masonry with a design value of the compressive strength of 6 N/mm$^2$. The architect wants to use (full) fired clay brick masonry with normal mortar joints. The normalized compressive strength of the bricks is 40 N/mm$^2$. Which masonry mortar should they minimal buy? **(3 points)**
Masonry mortar with a normalized compressive strength of ..?

A) 5 N/mm$^2$
B) 7.5 N/mm$^2$
C) 10 N/mm$^2$
D) 15 N/mm$^2$

23) Determine the normative reduction factor for the second-order effect of the wall in the figure below. The height of the wall is 2 m and the thickness is 200 mm.

A) 0.60
B) 0.73
C) 0.90
D) 0.92

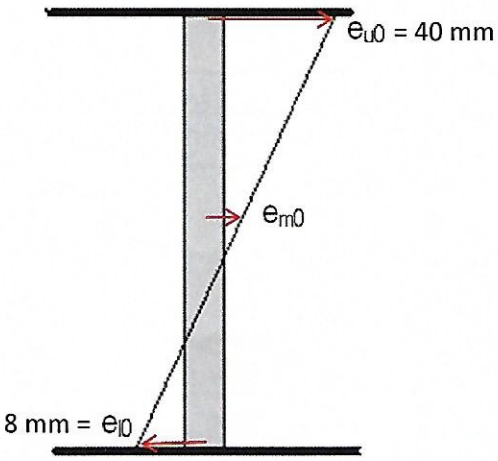


# END OF MATERIALS PART

# Formula Sheet Masonry

$V \leq \mu \cdot N$

$\Delta L = \Delta T \cdot \alpha \cdot L$

$\lambda = h/t \leq 27$
If $\lambda = 15$ à $20$,
than $\sigma_s \leq 1.5 - 2.0$ N/mm²
and $\sigma_s \leq f_k/4$ N/mm²

| Masonry unit | Total volume of perforations | Masonry mortar | | | Thin layer mortar | | | |
|---|---|---|---|---|---|---|---|---|
| | | K | α | β | Bed joint | K | α | β |
| Clay | ≤ 25 % | 0,6 | 0,65 | 0,25 | a | 0,8 | 0,75 | 0,1 |
| | ≤ 55 % | 0,5 | 0,65 | 0,25 | b | 0,7 | 0,7 | 0 |
| Calcium silicate | ≤ 25 % | 0,6 | 0,65 | 0,25 | b | 0,8 | 0,85 | 0 |
| | ≤ 55 % | 0,5 | 0,65 | 0,25 | b | 0,65 | 0,85 | 0 |
| Aggregate concrete | ≤ 25 % | 0,6 | 0,65 | 0,25 | b | 0,8 | 0,85 | 0 |
| | ≤ 60 % | 0,5 | 0,65 | 0,25 | b | 0,65 | 0,85 | 0 |
| Autoclaved aerated concrete | ≤ 25 % | 0,6 | 0,65 | 0,25 | b | 0,8 | 0,85 | 0 |

[a] Bed joint ≥ 0,5 mm and ≤ 5 mm.
[b] Bed joint ≥ 0,5 mm and ≤ 3 mm.

$f_k = K \cdot f_b^{\alpha} \cdot f_m^{\beta}$ $\quad f_d = f_k / \gamma_M$ $\quad \gamma_M = 1.7$

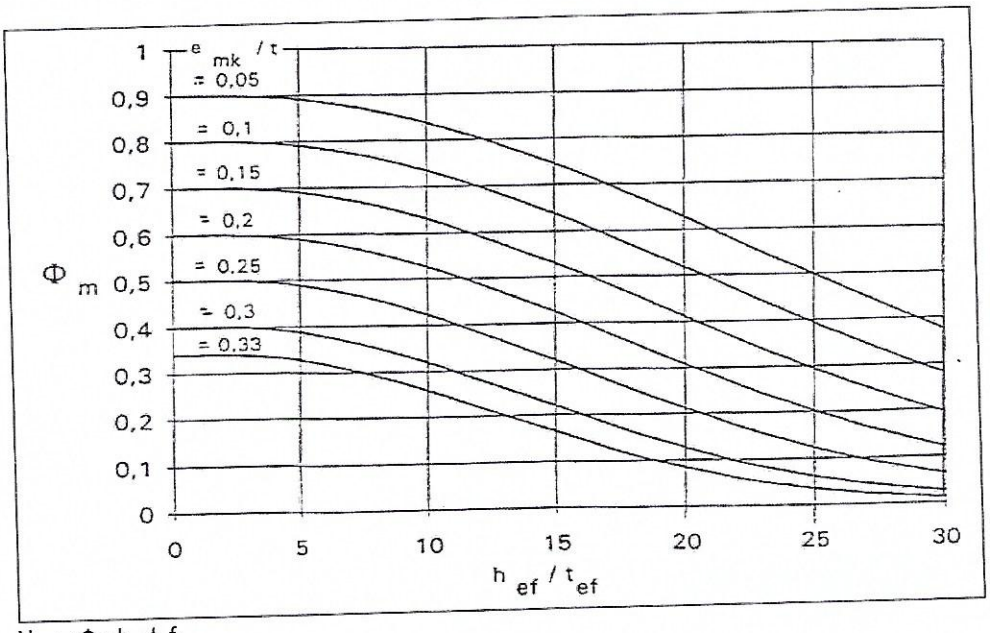


$N_{Rd} = \Phi \cdot b \cdot t \cdot f_d$

$e_{uk} = e_{u0}$ $\quad e_{mk} = e_{m0} + h/450$ $\quad e_{lk} = e_{l0}$ $\quad \geq 0.05 * t$

# Tables Timber

**Table 2.1. Material factors $\gamma_m$.**

| material | Material factor $\gamma_m$ |
|---|---|
| sawn timber | 1.30 |
| glued laminated timber | 1.25 |
| LVL, plywood, OSB | 1.20 |
| connections | 1.30 |
| metal plate connectors | 1.25 |

**Table 2.2. Height factors $k_h$ and length actor $k_l$.**

| Material | tension parallel to the grain direction and bending |
|---|---|
| Sawn timber with $\rho_k \leq 700$ kg/m³ | $1.0 \leq k_h = \left(\frac{150}{h}\right)^{0.2} \leq 1.3$ |
| Glued laminated timber | $1.0 \leq k_h = \left(\frac{600}{h}\right)^{0.1} \leq 1.1$ |
| LVL (laminated veneer lumber) | Depending on variations to be determined according to EN 14374 |
| Wood-based panels | 1.0 |

Note: the reference length for the length factor $k_l$ is L = 3000 mm (element length).

**Table 2.3. Climate classes.**

| Climate class | $\omega_{average}$ [%] | Description |
|---|---|---|
| 1 | 12 | Standard indoor conditions |
| 2 | 20 | Outdoor, covered structures |
| 3 | >20 | - poorly ventilated spaces (indoor) |
| | | - fully exposed to outdoor conditions (not covered) |
| | | - structures in and underneath water |

**Table 2.4. Load duration classes.**

| Load duration class | Cumulative duration of the characteristic load | Examples |
|---|---|---|
| Permanent | Longer than 10 years | Dead load |
| Long | 6 months - 10 years | Storage |
| Medium-Long | 1 week - 6 months | Life loads on floors |
| Short | Less than 1 week | Snow, wind (The Netherlands) |
| Instantaneous | | Accidental load, wind (Belgium) |

**Table 2.5. Values of $k_{mod}$.**

| Material | Standard | Climate-class (table 5.2) | Load duration class | | | | |
|---|---|---|---|---|---|---|---|
| | | | permanent | long | medium-long | short | very short |
| Sawn timber | EN 14081-1 | 1 | 0.60 | 0.70 | 0.80 | 0.90 | 1.10 |
| | | 2 | 0.60 | 0.70 | 0.80 | 0.90 | 1.10 |
| | | 3 | 0.50 | 0.55 | 0.65 | 0.70 | 0.90 |
| Glued laminated wood | EN 14080 | 1 | 0.60 | 0.70 | 0.80 | 0.90 | 1.10 |
| | | 2 | 0.60 | 0.70 | 0.80 | 0.90 | 1.10 |
| | | 3 | 0.50 | 0.55 | 0.65 | 0.70 | 0.90 |
| LVL | EN 14374 , EN 14279 | 1 | 0.60 | 0.70 | 0.80 | 0.90 | 1.10 |
| | | 2 | 0.60 | 0.70 | 0.80 | 0.90 | 1.10 |
| | | 3 | 0.60 | 0.55 | 0.65 | 0.70 | 0.90 |
| Plywood | EN 636 | | | | | | |
| | Parts 1, 2 and 3 | 1 | 0.60 | 0.70 | 0.80 | 0.90 | 1.10 |
| | Parts 2 and 3 | 2 | 0.60 | 0.70 | 0.80 | 0.90 | 1.10 |
| | Part 3 | 3 | 0.50 | 0.55 | 0.65 | 0.70 | 0.90 |
| OSB | EN 300 | | | | | | |
| | OSB/2 | 1 | 0.30 | 0.45 | 0.65 | 0.85 | 1.10 |
| | OSB/3, OSB/4 | 1 | 0.40 | 0.50 | 0.70 | 0.90 | 1.10 |
| | OSB/3, OSB/4 | 2 | 0.30 | 0.40 | 0.55 | 0.70 | 0.90 |

**Table 2.6. $\psi$ -factors for variable loads.**

| Load type | Description | $\psi_0$ | $\psi_1$ | $\psi_2$ |
|---|---|---|---|---|
| Category A | dwellings | 0.4 | 0.5 | 0.3 |
| Category B | offices | 0.5 | 0.5 | 0.3 |
| Category C | congresses, meeting places, theatres, conferences | 0.6 / 0.4[a] | 0.7 | 0.6 |
| Category D | shopping | 0.4 | 0.7 | 0.6 |
| Category E | storage | 1.0 | 0.9 | 0.8 |
| Category H | roofs | 0.0 | 0.0 | 0.0 |
| | snow | 0.0 | 0.2 | 0.0 |
| | wind | 0.0 | 0.2 | 0.0 |

[a] for escape routes like stairs: 0.6, other situations: 0.4

Note: the factor $\psi_1$ is used to determine the so-called frequent value of the variable loads in case of fire design calculations. The factor $\psi_1$ is also used to determine the immediate deformations due to the frequent value of the variable loads. These deformations are with the load combination according to formula (6.15 b) in EN 1990 [11]. Traditionally there are no requirements for these deformations in the Netherlands.

**Table 2.7. $k_{def}$ factors for wood and wood-based materials.**

| | | Climate class | | |
|---|---|---|---|---|
| | | 1 | 2 | 3 |
| Sawn timber | EN 14081-1 | 0.6 | 0.8 | 2.0 |
| Glued laminated timber | EN 14080 | 0.6 | 0.8 | 2.0 |
| LVL | EN 14374, EN 14279 | 0.6 | 0.8 | 2.0 |
| Plywood | EN 636 | | | |
| | Part 1 | 0.8 | - | - |
| | Part 2 | 0.8 | 1.0 | - |
| | Part 3 | 0.8 | 1.0 | 2.5 |
| OSB | EN | | | |
| | OSB/2 | 2.25 | - | - |
| | OSB/3, OSB/4 | 1.50 | 2.25 | - |

Note: if it is to be expected, that the wood dries under permanent loading after erection, $k_{def}$ shall be increased with 1,0.

**Table 2.8. Strength classes for wood.**

| Strength class | | | **C18** | **C24** | D30 | D40 | D50 | D70 | GL24h |
|---|---|---|---|---|---|---|---|---|---|
| Ultimate Limit States (ULS) | $f_{m,k}$ | N/mm² | **18** | **24** | 30 | 40 | 50 | 70 | 24 |
| | $f_{t,0,k}$ | N/mm² | **10** | **14.5** | 18 | 24 | 30 | 42 | 19.2 |
| | $f_{t,90,k}$ | N/mm² | **0.4** | **0.4** | 0.6 | 0.6 | 0.6 | 0.6 | 0.5 |
| | $f_{c,0,k}$ | N/mm² | **18** | **21** | 24 | 27 | 30 | 36 | 24 |
| | $f_{c,90,k}$ | N/mm² | **2.2** | **2.5** | 5.3 | 5.5 | 6.2 | 12.0 | 2.5 |
| | $f_{v,k}$ | N/mm² | **3.4** | **4.0** | 3.9 | 4.2 | 4.5 | 5.0 | 3.5 |
| | $\rho_k$ | kg/m³ | **320** | **350** | 530 | 550 | 620 | 800 | 385 |
| | $E_{m,0,k}$ | N/mm² | **6,000** | **7,400** | 9,200 | 10,900 | 11,800 | 16,800 | 9,600 |
| Seviceability Limit States (SLS) | $E_{m,0,mean}$ | N/mm² | **9,000** | **11,000** | 11,000 | 13,000 | 14,000 | 20,000 | 11,500 |
| | $E_{m,90,mean}$ | N/mm² | **300** | **370** | 730 | 870 | 930 | 1,330 | 300 |
| | $G_{mean}$ | N/mm² | **560** | **690** | 690 | 810 | 880 | 1,250 | 650 |

- A distinction is made between C-classes ("softwood") and D-classes ("hardwood").
- Any constructive element must be classified in class a strength (no batch approval allowed based on the approval of random pieces).
- Wood for structural applications can mechanically or visually be graded. If the wood is visually graded, in the Netherlands this has, for "softwoods" to be carried out according to NEN 5499 [13]. The class T1 defined in NEN 5499 equals class C defined in the "KVH".

The class T2 defined in NEN 5499 equals class B defined in the "KVH".

- Visually graded Pine, spruce, larch, Douglas (European) and classified in class T1 according to NEN 5499 [13] meets the requirements for strength class C18.
- Visually graded Pine, spruce, larch, Douglas (European) and classified in class T2 according to NEN 5499 meets the requirements for strength class C24.
- Visually graded Douglas (European) and classified in classes T2 according to NEN 5499: C22
- Oak (Central European), classified in class B accordance to "KVH": C20
- Meranti (red): strength class D24
- Oak (Polish): D18 / D24 / D30
- Iroko: D24 (unsorted)
- Vitex, Robinia, Sucupira vermelho: D30
- Bilinga: D24 / D50
- Merbau: D30 / D50
- Teak, Iroko (sorted) Sucupira, Itauba, amarelo, Piquia: D40
- Bangkirai, Sapucaia, Angelim vermelho, Denya: D50
- Masseranduba, Cumaru: D60
- Azobé: D70

Note: the strength classes for the different wood species are based on "Wood hand Strength data [12], a publication of "Centrum Hout" in Almere, the Netherlands.